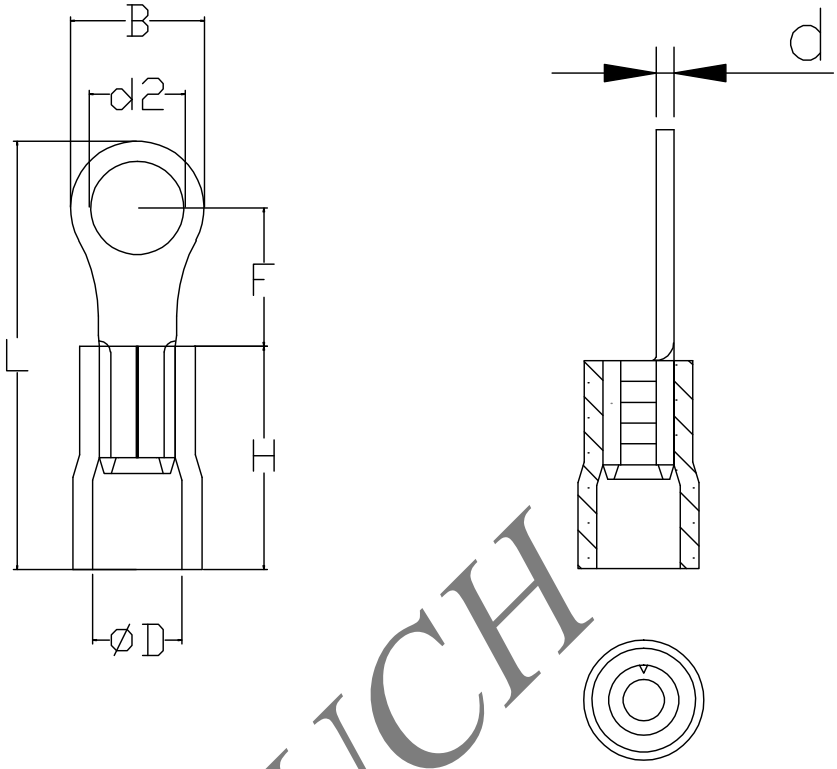

ZUCH

	STUD SIZE d2 ±0.1		B±0.1	L±0.2	F±0.2	H±0.1	ØD ±0.2	d -0.05			
SIZE	#4	3.2	5.6	17.8	5.0	10.0	4.2	0.7			

	Unit MM（IN）	NO	Technical Requirement	Version	
Wire Range	22-16A.W.G (0.5-1.5mm²)	1	No oxidation	4	
Voltage	600VOLTS MAX.	2	No structure deformation	5	
Current	19A	3		6	

Part No.	RV1.25-3	Terminal material	Brass with tin plated	Made	高迪	Check	杨涛		
Drawing No	KT-061253	Insulation material	PVC						
Date	2016. 9. 2	Color		浙江珠城科技股份有限公司 Zhejiang ZUCH Technology CO., Ltd.					
Material Thickness		0.7mm							