9001 Series

DIN41612 C Type Male

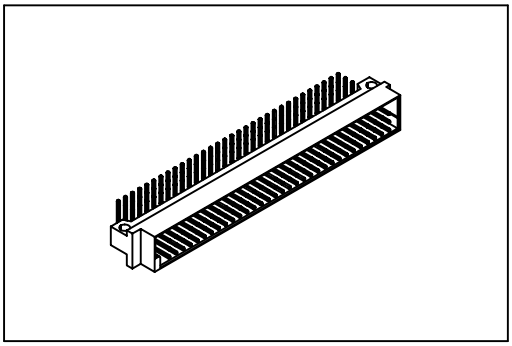

Material:

Housing: 30% Glass filled PBT UL94V-0.
Contacts: Brass.

Electrical Characteristics:

Current Rating: 2 AMP.
Dielectric Withstanding Voltage: AC 1000V For 1 minute.
Insulator Resistance: 1000MΩmin. at DC 500V.
Contact Resistance: 30mΩmax. at DC 100mA.
Operating Temperature: −55°C ~+105°C .

Features:

* UL, cUL listing.
* Mates with Female 3Row
  9001−1296,1264 C Type.
  9001−1496,1464 R Type.
  9001−1264 IDC Type.

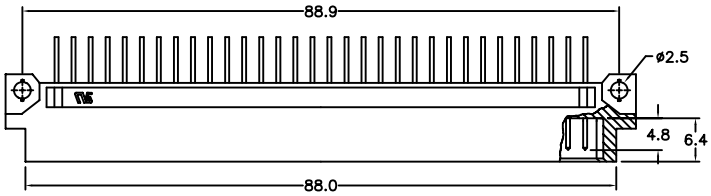

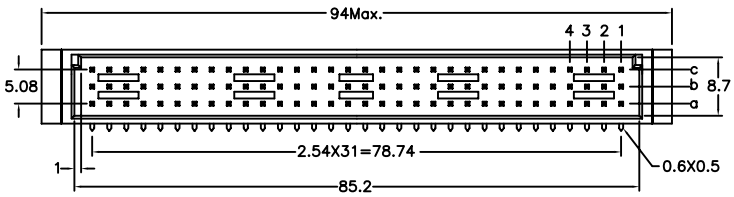

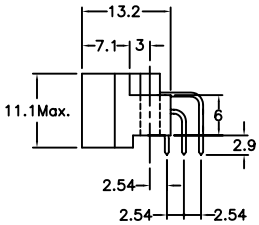

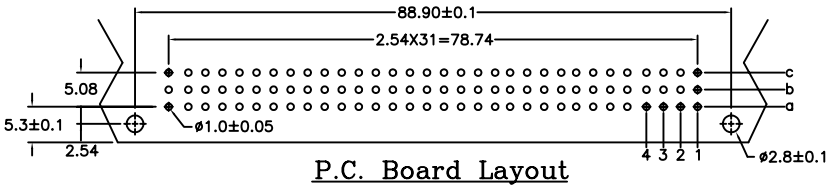

P.C. Board Layout

Pitch	Position	Rows with Contacts	Contact Arrange
2.54mm	96	a b c	
	64	a b −	
	64	a − c	
	32	a − −	
5.08mm	48	a b c	
	32	a b −	
	32	a − c	
	16	a − −	

Ordering information

9001−	1	1	96	1	C	00	L1	A
Series	1: 2.54mm 2: 5.08mm	1: Male	Position	1: Dip Length	C: Dip Tin Contact Gold G: Gold	00: G/F 10: 10μ″ 15: 15μ″ 30: 30μ″	Blank: W/O Lock L1: With Lock See Page CA04	A: Tray Package

*Standard Gold Flash.
*32, 64 Pin Standard a − c Row.