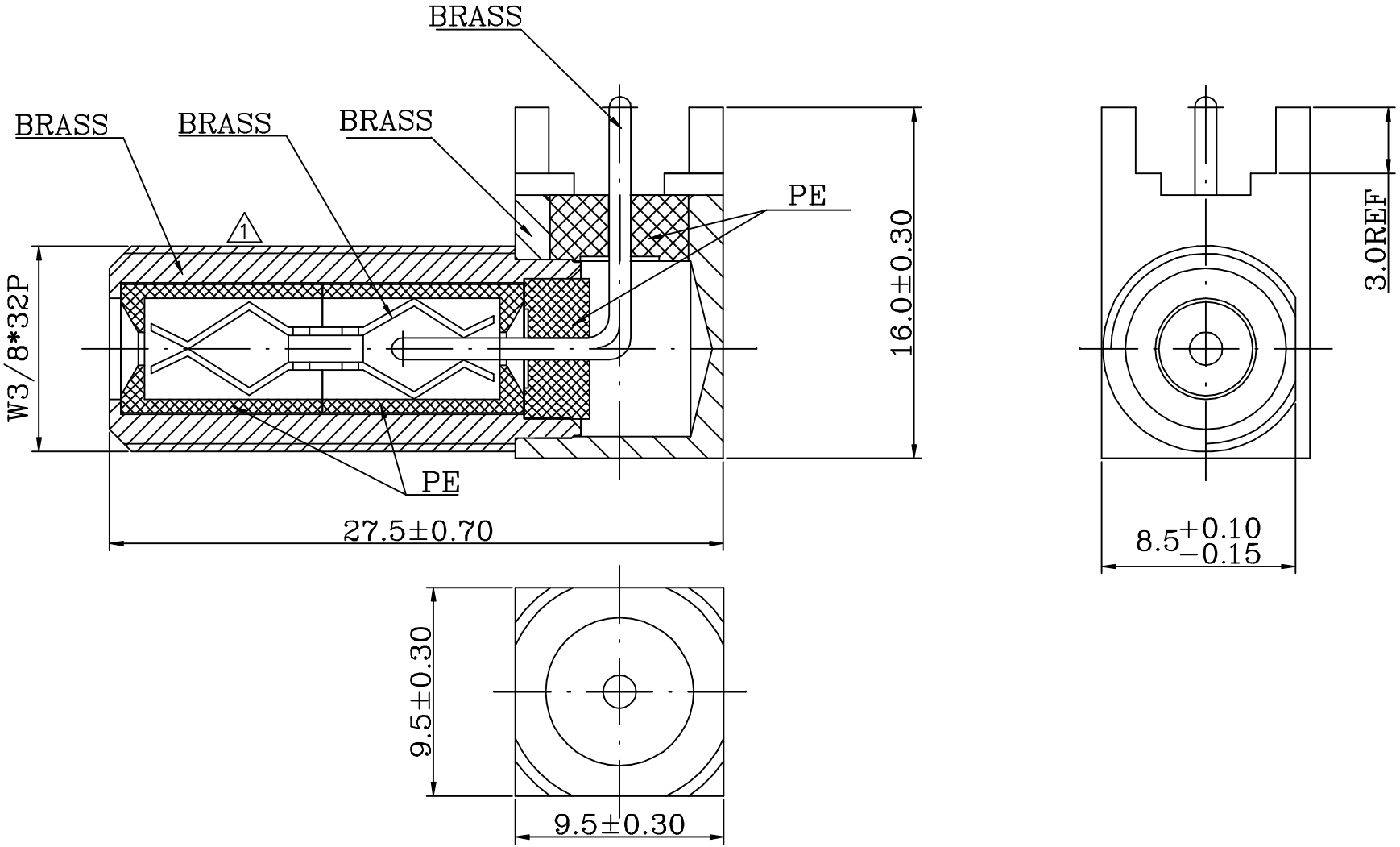

				DESCRIPTION	成品圖	SCALE	4/1 UNTTS:MM	SRD ANGLE
				MODEL NO	F816	△		
APPROVED	CHECKED	DRAWING	DESIGNED	DRAWING NO	JT00700084	△1	2002/09/12	A2
		XHB	XHB	FINISHING		△	2001/10/08	A1
				MATERIAL		SYE	DATE	REVISION