嘉尼企業股份有限公司CANAL ELECTRONIC CO.,LTD.

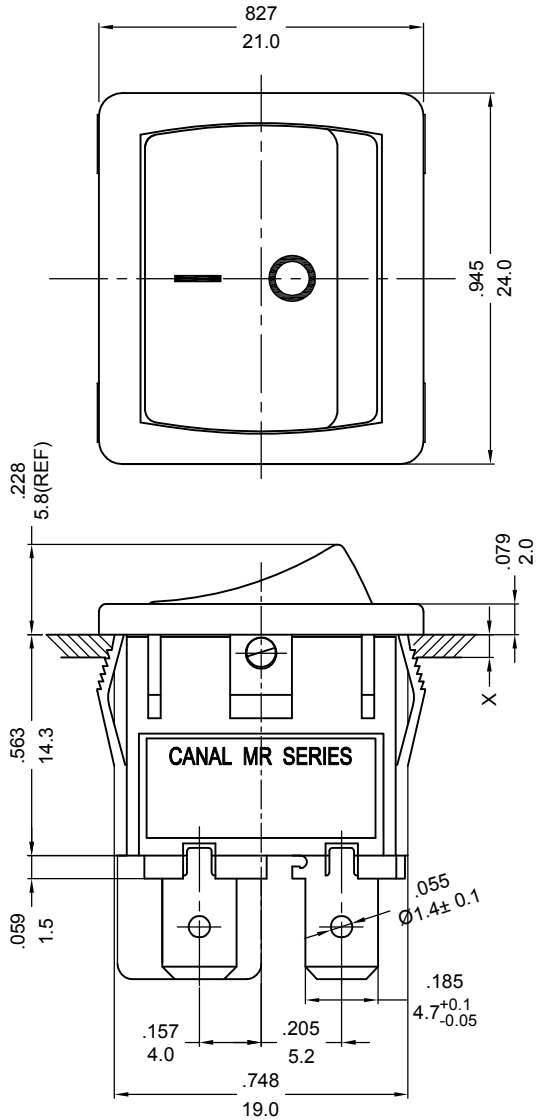

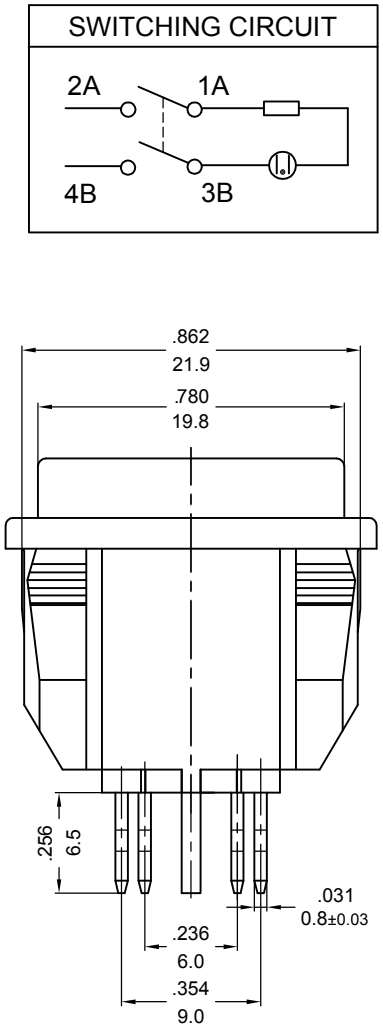

SWITCHING CIRCUIT

ROCKER SWITCH MODEL: MR SERIES

RATING:12(4)A 125/250V~ (cURus/ENEC15)
10(4)A 250V~T125/55 (CQC)
DIELECTRIC WITHSTAND VOLTAGE: 1500VAC FOR 1 MINUTE
INSULATION RESISTANCE:500VDC 100MΩ (MIN)
CONTACT RESISTANCE:20mΩ INITIAL(MAX.)
ILLUMINATION:200~250VAC

嘉尼工程
2022.05.26
文件管制章

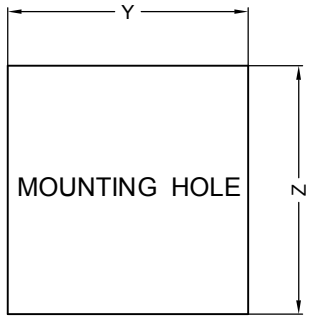

X=PANEL THICKNESS	Y	Z
0.8~1.2mm	19.2 $^{+0.1}_{-0}$ mm	21.9 $^{+0.1}_{-0}$ mm
1.3~2.0mm	19.4 $^{+0.1}_{-0}$ mm	21.9 $^{+0.1}_{-0}$ mm
2.1~3.0mm	19.8 $^{+0.1}_{-0}$ mm	21.9 $^{+0.1}_{-0}$ mm

PANEL CUTOUT DIMENSION TABLE

NOTE: TOLERANCES UNLESS OTHERWISE SPECIFIED: ± .012/0.3 (in/mm)

REVISION	DESCRIPTION	REVISED BY	TOLERANCES				ANGLE ½°	UNIT	mm	PART NAME	MR SPEC DRAWING	DWG NO
4			DRAWN BY	楊偉韶	DESIGNED BY	蔡 劍	SCALE	2/1				S8866A
3												
2			CHECKED BY		APPROVED BY		DATE	2022.05.25		PART NO	MR-210C5*-G**B-1PNC	
1 2022.05.25	首次出图	楊偉韶										