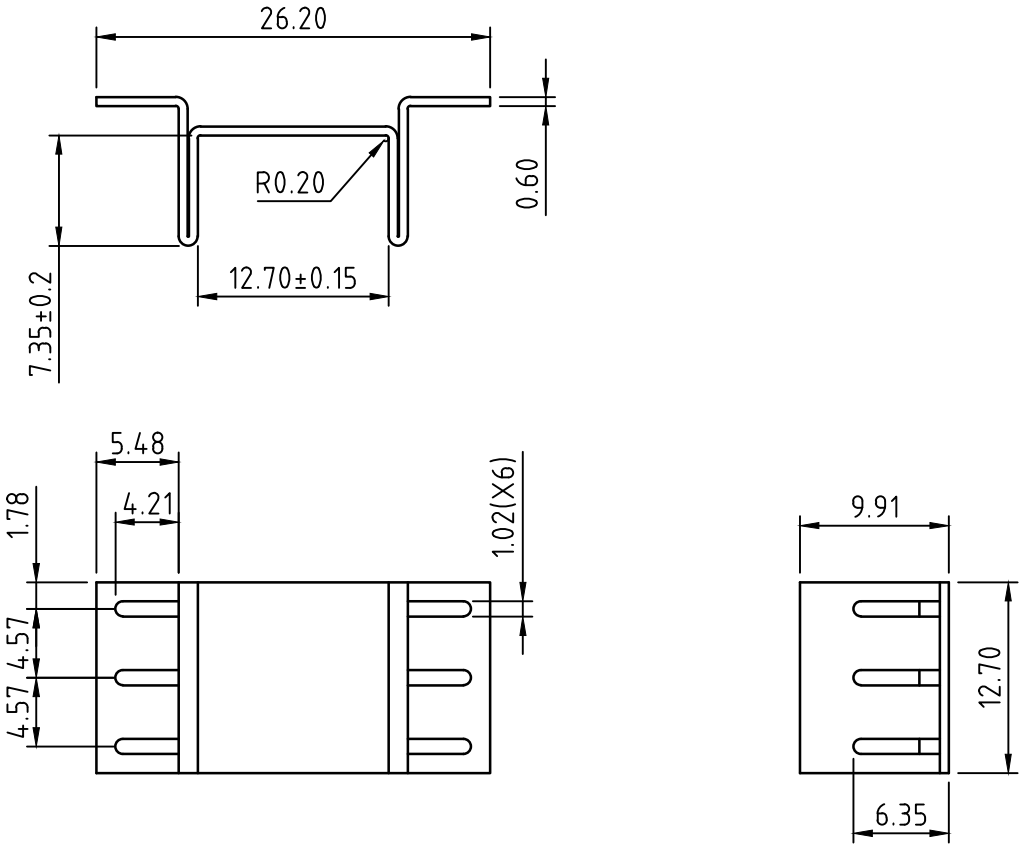

NOTE:
1. MATERIAL: CUPPER T=0.6mm
2. FINISH: MATTE TIN PLATED

	UNLESS OTHERWISE SPEC. DIMENSIONS ARE IN MM TOLERANCES ON	龍德精密有限公司 E-MAIL:lungde@lungder.com.tw	LDMC Metal Stamping LONG DER MACHINERY CO.,LTD.	
	DECIMAL: .X ± .XX±0.3 .XXX±	ITEM	HEAT SINK	
THIRD ANGLE PROJECTION	ANGLE: ±1/2°			
	MATERIAL:	SCALE 2:1	PART NO: LDM-006C-0013-M	REV 1
	FINISH:			