一般公差	
尺寸區分	公差
0>1.0	±0.1
1.0>6.0	±0.2
6.0>12.0	±0.3
12.0>25.0	±0.4
25.0>	±0.5

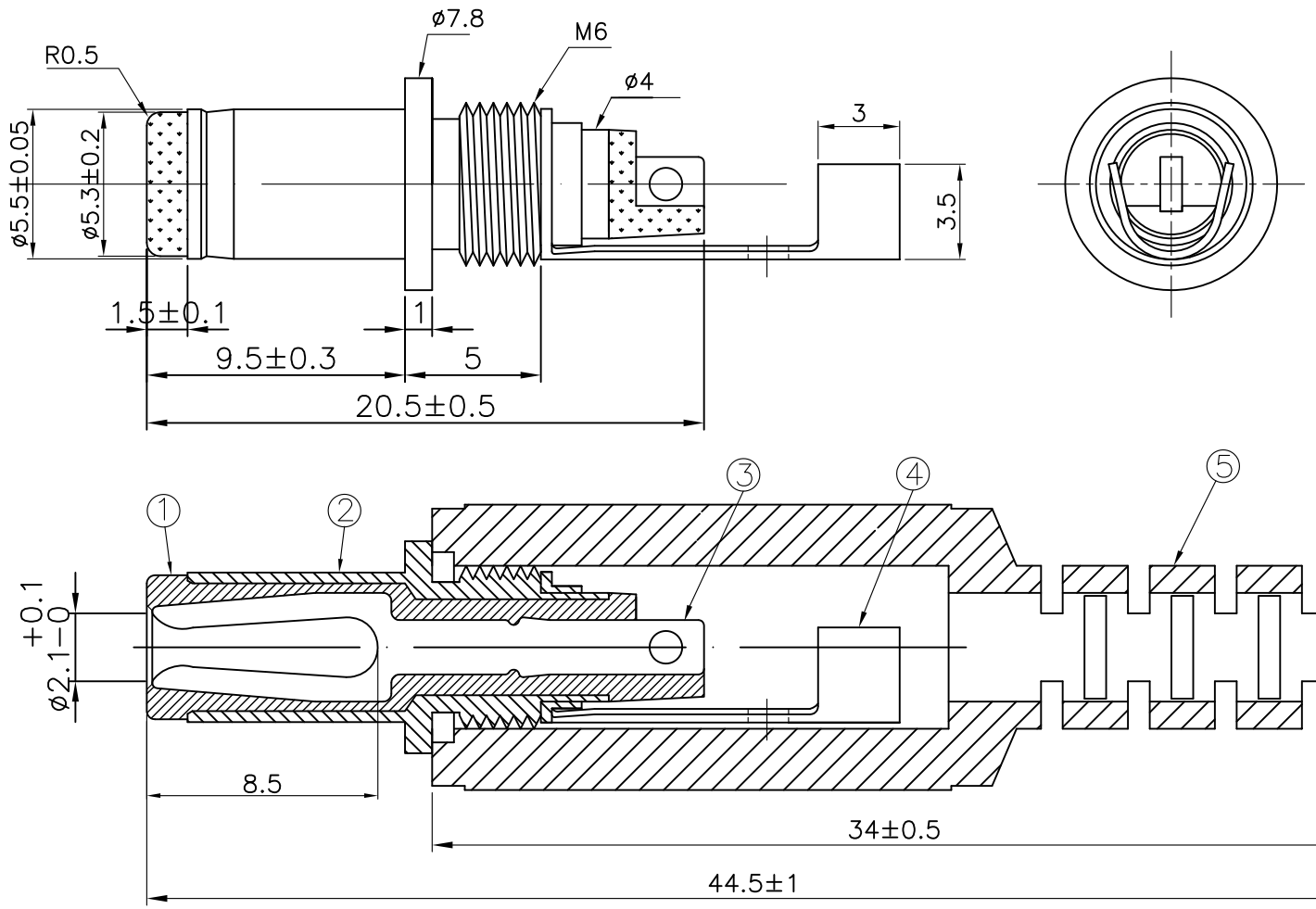

NO	CONTENT
7	
6	
5	TPR BLACK
4	BRASS NICKEL
3	P−BRONZE NICKEL
2	BRASS NICKEL
1	PBT BLACK

MARK	REVISION	DATE	SIGN	APPO
1				
2				
3				

APPROVED BY	CHECKED BY	DESINGED BY	DRAWN BY
承認	檢圖	設計	制圖

UNIT	mm [in]
SCALE	4 : 1
DATE	01/07/2013

IDITECH Corporation

DESCRIPTION : *DC PLUG ø5.5*ø2.1*9.5L*

P/N : DCP-101A

DRAWN NO: *PA5521TV−9.5−TPR00*

REV *A*